BUTTERFLY VALVES

THAT SATISFIES

GROUP

05

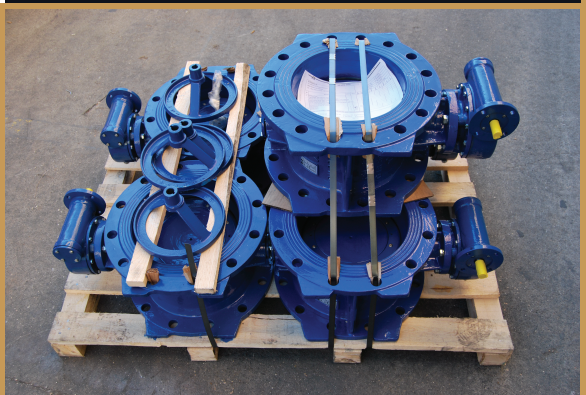

DAVINCI VALVES ™

MANUFACTURE BROCHURE

A BUTTERFLY VALVE

is a shut-off valve with a simple construction.
In closed position, the disc blocks the valve bore while in open position, the disc is turned to allow flow.
A quarter turn takes the valve from fully open to fully closed position, or opposite, and thus the butterfly valve allows for quick opening and closure.

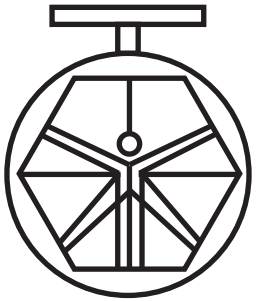

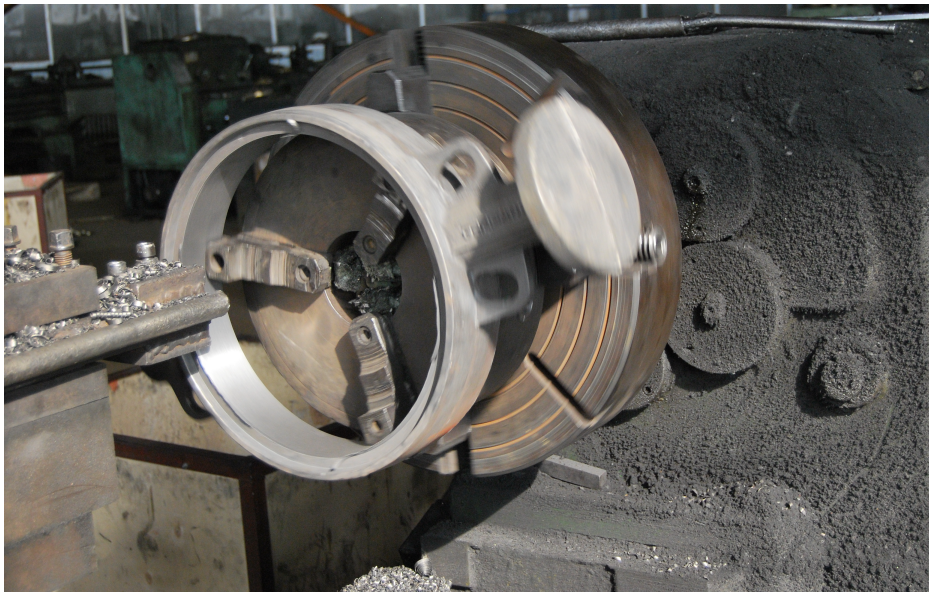

The butterfly valve can be centric or eccentric. On a centric (concentric) butterfly valve the stem is centered in the middle of the disc and the disc centered in the bore. The eccentric butterfly valve has one or more stems (stub shafts) located offset from the center according to the categories of double and triple offset valves.

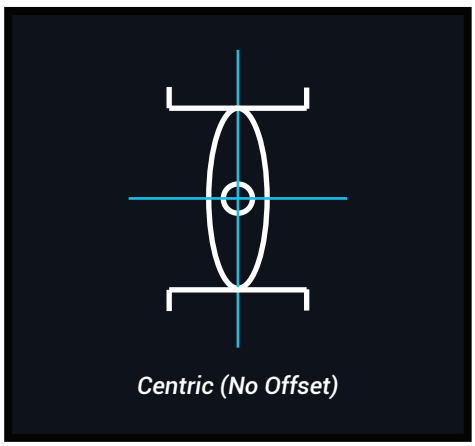

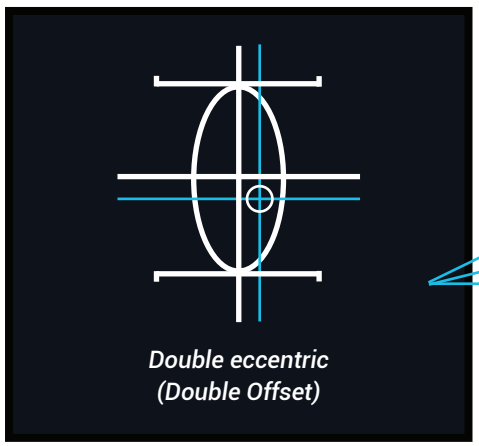

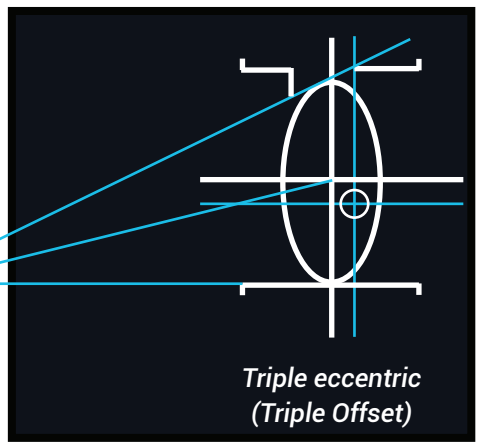

APPLICATIONS

Butterfly valves can be used for a broad range of applications
within water supply, wastewater treatment, fire protection and gas supply,
in the chemical and oil industries, in fuel handling systems, power generation etc.

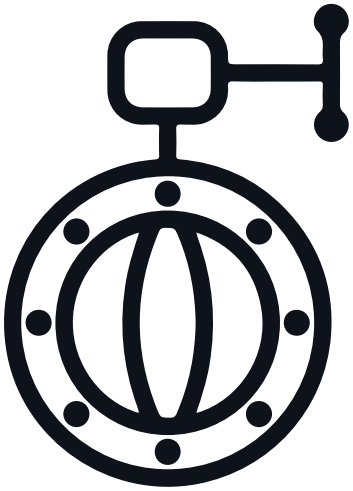

Some of the advantages for this type of valve are the simple construction not taking up too much space, and the light weight and lower cost compared to other valve designs.The valves can be operated by handles, gears or actuators according to any specific need.

We offer one of the widest ranges of butterfly valves at the market reflecting
our customers' needs. And of course, we offer a wide variety of material
configurations for each of these types as well as any type of actuation .
This means that we most probably can supply the right valve for your application.

MANUFACTURE

In DAVINCI VALVES we manufacture the best quality butterfly valves and our manufacture programm includes our technical service through all the different steps necessary to get your product just the way you need.

1

FOUNDRY

2

MECANIZE

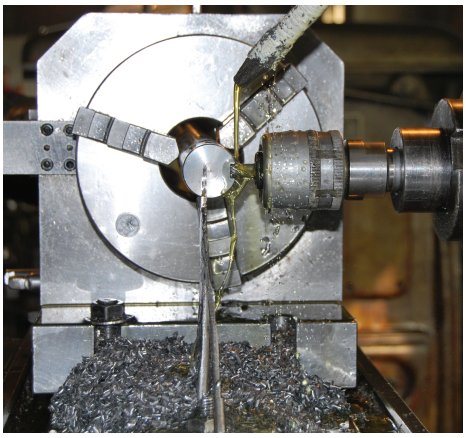

3

GRINDING

4

PAINTING

5

ASSEMBLY

6

TESTING

TESTING

DAVINCI VALVES™ QUALITY ASSUREMENT

DAVINCI VALVES™ PRODUCT QT ASSUREMENT

DAVINCI VALVES™ COMPANY QT ASSUREMENT

If you need specific certification for the different types of tests that verify the masurements, the quantities, the weights, in addition to the tests that check both, the components and the final product, this is the absolute guarantee service of DAVINCI VALVES LTD, through which it is ensured that the order sent to you is the one actually contracted.

The consumption of time, resources and efforts in the import process is overwhelming due to the complexity it requires and it is highly recommended to be advised by experts in this field. Avoiding possible delays and unnecessary complications you will have enough room to dedicate your time to matters of greater importance in your company. In DAVINCI VALVES LTD we offer you a personalized service adapted to your requiremets.

While the import process lasts, you will know the status of your goods with all detailed information.

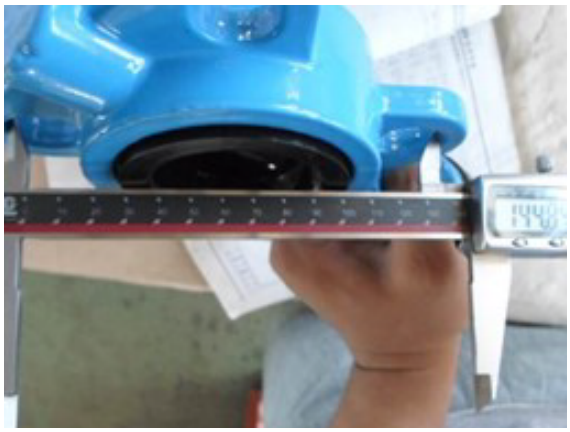

BUTTERFLY RANGE 1/2

BUTTERFLY DOUBLE ECCENTRIC Ref. 104/05 DAVINCI VALVES

Material construction in
Ductile iron GJS450
Working pressure:
1.0Mpa 1.6Mpa 2.5Mpa
flanged ends DIN NP 10/16/25/40
Face to face DIN 3202 F-4/BS5155
Epoxy paint FBE Min 250 Mic

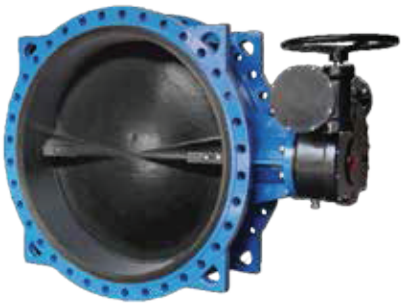

BUTTERFLY SERIE 13 DAVINCI VALVES Ref. 102/03 CENTER STEM FLANGED END

Material construction in
Ductile iron GJS450
Disc in ductile iron GJS450
and s.steel CF8M
Seat Vulcanize EPDM
Working pressure: 1.0Mpa 1.6Mpa
Face to face EN 558-1 series 13
(BS 5155)
Epoxy paint FBE Min 250 Mic

BUTTERFLY WAFER TYPE Ref. 100/01 DAVINCI VALVES CENTER STEM

Material construction in
Ductile iron GJS450
Disc in ductile iron GJS450
and s.steel CF8M
Working pressure:
1.0Mpa 1.6Mpa
Face to face EN 558-1 series 20
(API609 BS 5156)
Epoxy paint FBE Min 250 Mic

BUTTERFLY LUG TYPE Ref. 101/02 DAVINCI VALVES CENTER STEM

Material construction in
Ductile iron GJS450
Disc in ductile iron GJS450
and s.steel CF8M
Working pressure:
1.0Mpa 1.6Mpa
Face to face EN 558-1 series 20
(API609 BS 5156)
Epoxy paint FBE Min 250 Mic

BUTTERFLY RANGE 2/2

BUTTERFLY SERIE 20 Ref. 103/04
DAVINCI VALVES
CENTER STEM FLANGED END

Material construction in
Ductile iron GJS450
Disc in ductile iron GJS450
and s.steel CF8M
Seat cartridge type EPDM
Working pressure 1.0Mpa 1.6Mpa
Face to face EN 558-1 series 20
(API609 BS 5156)
Epoxy paint FBE Min 250 Mic

BUTTERFLY SERIE 13
DAVINCI VALVES Ref. 105/ 06
CENTER STEM GROOVE END

Material construction in
Ductile Iron GJS450
Disc Dúctil iron GJS450 Vulcanize
Working pressure: 1.0Mpa 1.6Mpa
Tube connection according
ANSI B3610 ISO 4200 DIN2448
BS 1387 BS 3600
Epoxy paint FBE Min 250 Mic

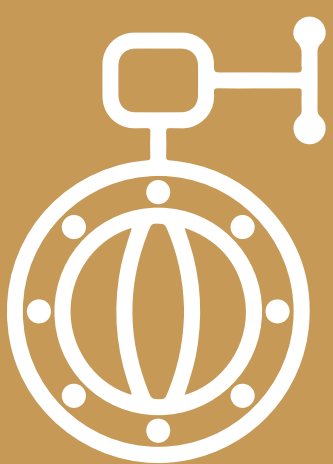

GROUP

05

BUTTERFLY VALVES

China / Hong Kong: (0086) 1734 0168 233
España: (0034) 616 553 797
18 Dongyu Street, Square One,
11th Floor 1101,Jinjiang District,
Chengdu, Sichuan CHINA

10F/Tower A, Billion Center,
1 Wang Kwong Road, Kowloon Bay Kowloon HONG KONG

DAVINCI VALVES™

www.davincivalves.com